Computer Applications in Business

Lecture 5
Transforming Data into Information

Farjana Rahman Farin
Lecturer, Dept. of CSE, Sonargaon University

How Computers represent Data

Data representation in computer science is about how a computer interprets and functions with different types of information. Different information types require different representation techniques.

When working with various forms of data, it is important to grasp a fundamental understanding of:

- Binary system
- Bits and Bytes
- Number systems: decimal, hexadecimal
- Character encoding: ASCII, Unicode

- Data in a computer system is represented in binary format, as a sequence of 0s and 1s, denoting 'off' and 'on' states respectively. The smallest component of this binary representation is known as a bit, which stands for 'binary digit‘

- A byte, on the other hand, generally encompasses 8 bits. An essential aspect of expressing numbers and text in a computer system, are the decimal and hexadecimal number systems, and character encodings like ASCII and Unicode.
- For instance,

1101=13

This interpretation happens consistently in the background during all of your interactions with a computer system.

- 1 bit = Binary Digit
- 8 bits = 1 byte

- EBCDIC. EBCDIC (pronounced EB-si-dic) stands for Extended Binary Coded Decimal Interchange Code. EBCDIC b an eight-bit code that defines 256 symbols. It is still used in IBM mainframe and midrange systems, but it is rarely encountered in personal computers.
- ASCII. ASCII (pronounced AS-key) stands for the American Standard Code for Information Interchange. Today, the ASCII character set is by far the most commonly used in computers of all types.
- Unicode. The Unicode Worldwide Character Standard provides up to four bytes—32 bits—to represent each letter; number, or symbol. With four bytes, enough Unicode codes can be created to represent more than 4 billion different characters or symbols

How Computers Process Data

Input:

Data Entry Devices (e.g., Keyboard, Mouse): Users input data into the computer through various devices.

Processing:

Central Processing Unit (CPU): The CPU processes data by executing instructions stored in memory.

Control Unit: Manages the flow of data and instructions within the CPU.

Arithmetic Logic Unit (ALU): Performs arithmetic and logical operations.

Output:

Output Devices (e.g., Monitor, Printer): Processed data is presented to users in a human-readable form.

Storage:

- **Memory (RAM):** Temporarily stores data and instructions for the CPU.
- **Storage Devices (e.g., Hard Drive, SSD):** Stores data persistently for long-term use.

The flow of data starts with input, goes through processing by the CPU, results in output presented through output devices, and involves storage in both temporary (RAM) and long-term (storage devices) memory.

If you're looking for a visual representation, you might want to search for "information processing cycle" or "computer processing diagram" online to find illustrations that depict these concepts visually.

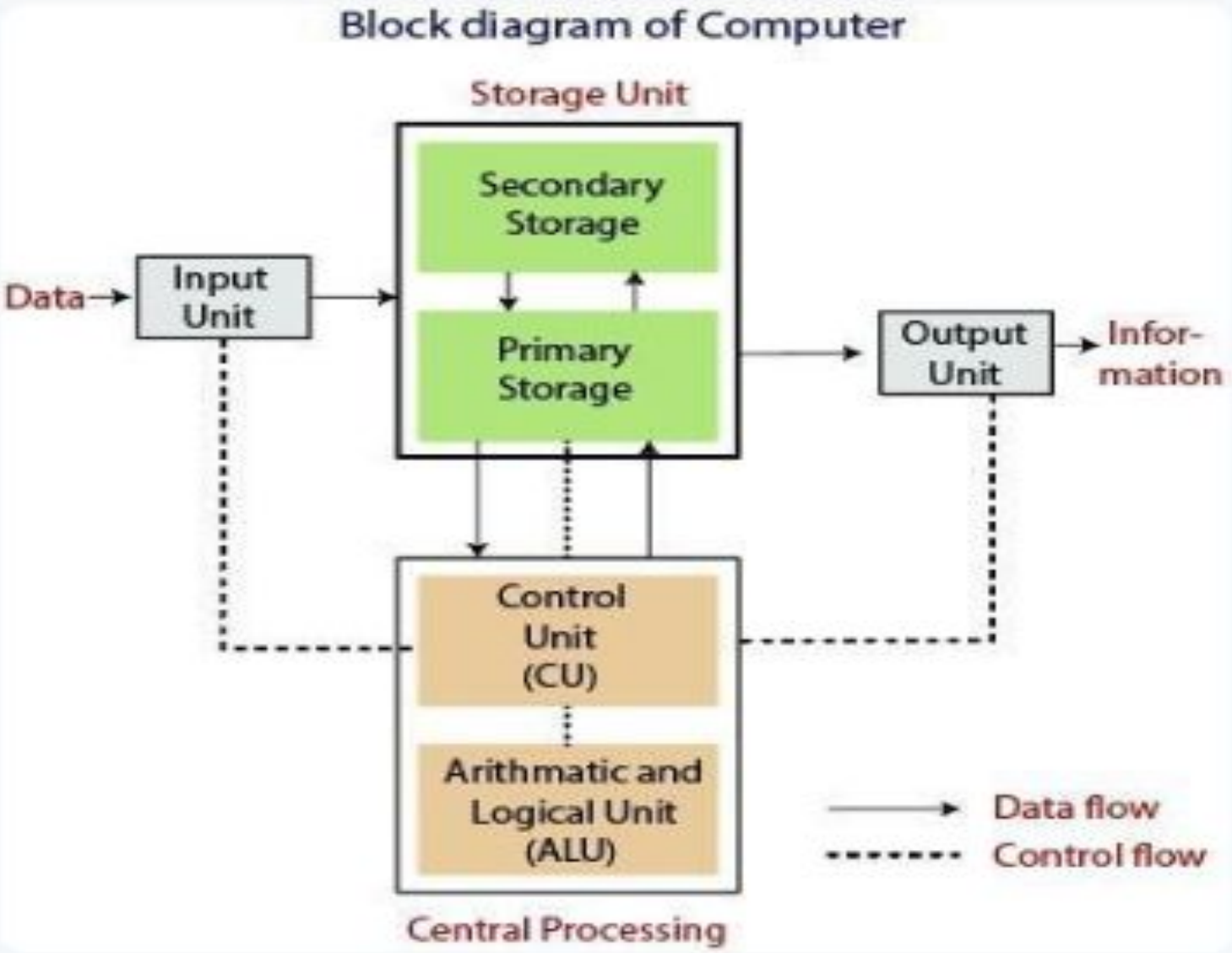
Block diagram of Computer
Storage Unit
Secondary Storage
Primary Storage
Data
Input Unit
Output Unit
Infor-mation
Control Unit (CU)
Arithmatic and Logical Unit (ALU)
Data flow
Control flow
Central Processing

Factors Affecting Processing Speed: CPU's design determines its basic speed, but other factors can make chips already designed for speed work even faster.

1. **Registers:** The first factor that affects the processing speed of a computer is a register. A register is a small, high-speed memory inside a **CPU**. CPU contains a number of registers. The data and instructions are stored by registers while the CPU processes them.

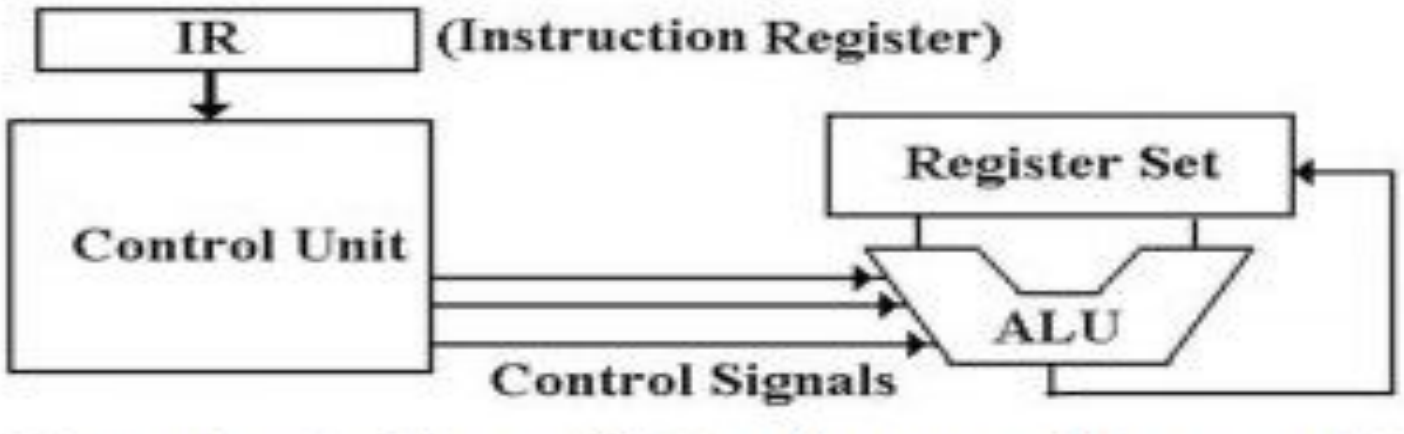

Computer Registers effect on the processing speed of a computer system

RAM: The size of RAM is also included in the factors that affect the processing speed of the computer. The bigger amount of RAM means that more program instructions and data can be stored in memory.

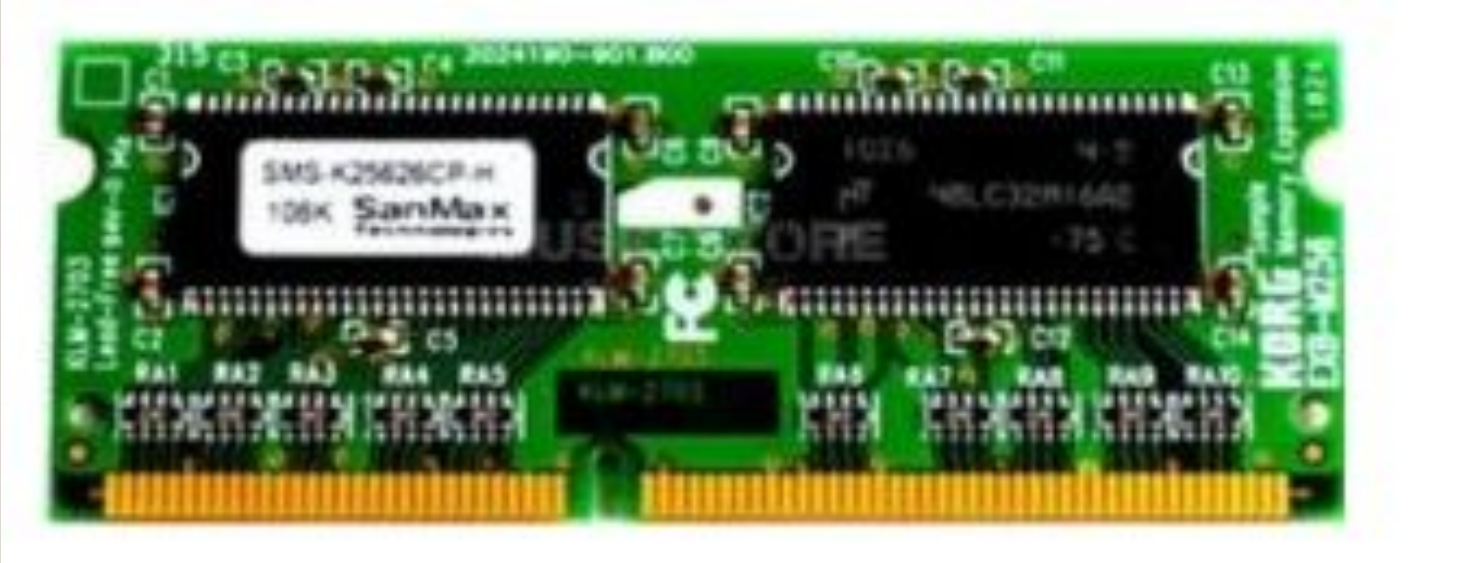

System Clock: A system clock is an electronic component that is an important factor that affects the processing speed of the computer. It generates electric signals at a fast speed. The time required to execute a single instruction is called clock speed. Clock speed tells us how much time a CPU takes to execute each instruction. CPU takes from 1 to 6 clock ticks to execute one instruction.

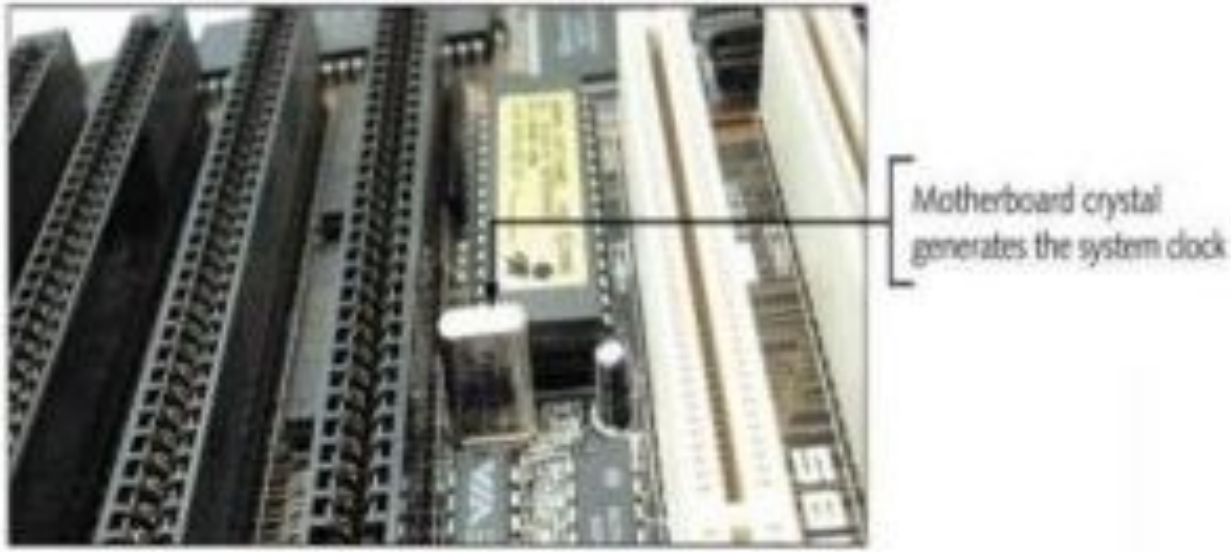

BUS:

The physical path between the components of a computer is a bus. Bus width is also considered in the factors that affect the processing speed of a computer. A higher bus width means that the user can carry more data. It increases the performance of the computer.

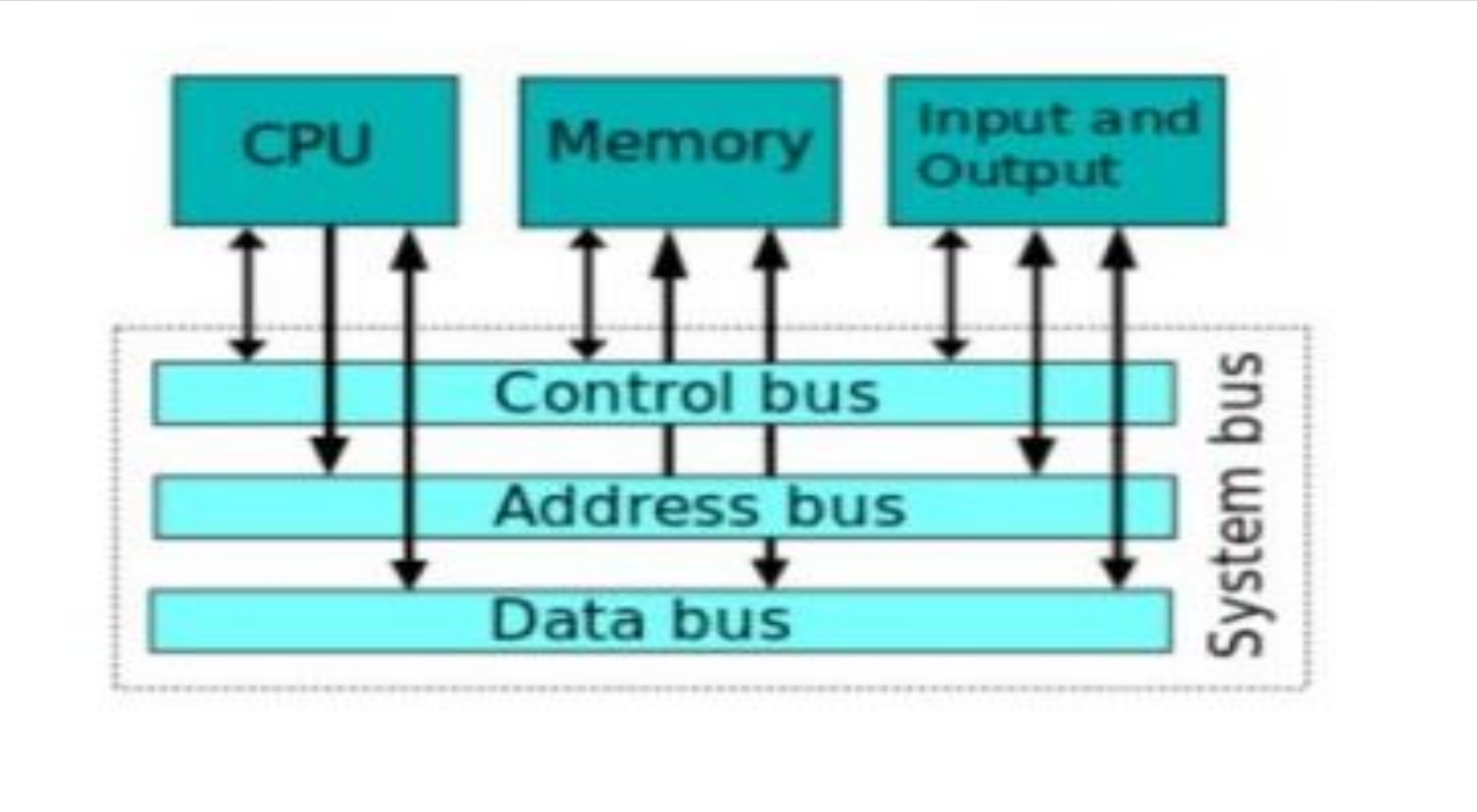

Cache Memory: A cache is a high-speed memory that holds the most recent data and instructions that have been loaded by the CPU. It is designed to speed up the transfer of data and instructions. The cache is located directly on the CPU and RAM. It is faster than RAM.

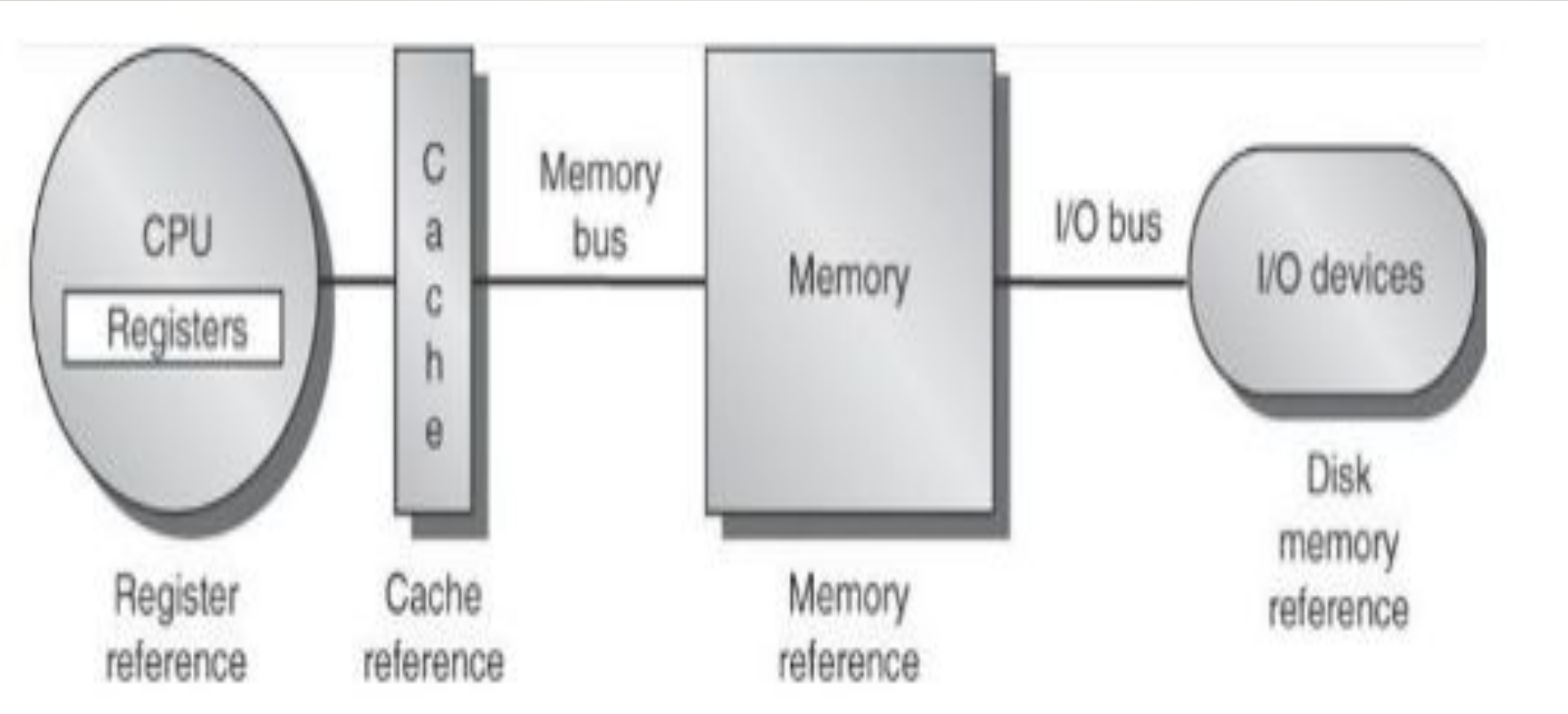

Core Count: The number of cores home is the number of the structures that our CPU can execute at the same time. For example, a quad-core CPU can execute four instructions at the same time because it's got four cores. Whereas a hex-core CPU can execute six instructions at the same time because it's got six cores.